Dart Aerospace Ltd.

Split into 08/06/26

Date: Friday, 23/05/2008 12:41:36 PM
User: Julie Lecocq

Process Sheet

Customer	: CU-DAR001 Dart Helicopters Services	**Drawing Name**	: LITTER TIE DOWN ASS'Y (LOCKING) - UNDER REVIEW
Job Number	: 39455 -1		
Estimate Number	: 10495		
P.O. Number	:	**Part Number**	: D2360
This Issue	: 23/05/2008 **S.O. No.** :	**Drawing Number**	: D2360REVD,D2341REVF
Prsht Rev.	: NC	**Project Number**	: N/A
First Issue	: / / **Type** : MACHINED PARTS	**Drawing Revision**	: D / F
Previous Run	: 36750	**Material**	:
Written By	:	**Due Date**	: 15/06/2008 **Qty:** ~~6~~ 1 **Um:** Each
Checked & Approved By	: JW 08.5.23		
Comment	: est rev H 07.06.12 ecn 825 EC		

Additional Product

Job Number:

Seq. #:	Machine Or Operation:	Description :
1.0	D6201	"T" Extrusion

Comment: Qty.: 1.1067 f(s)/Unit Total : 6.6402 f(s)
Material: D6201 (6061-T6 (QQ-A-200/8) 4" x 4" x 3/8" Thick 'T' extrusion)
Batch: B36793 MK 08/06/21 (6)

2.0	BAND SAW	BAND SAW

Comment: BAND SAW
Cut blanks: 12.65" Long MK 08/06/21 (6)

3.0	HAAS1	HAAS CNC VERTICAL MACHINING #1

Comment: HAAS CNC VERTICAL MACHINING #1
Machine as per Folio D2341 and Dwg D2341 MK 08/06/22 (6)

4.0	QC2	INSPECT PARTS AS THEY COME OFF MACHINE

Comment: INSPECT PARTS AS THEY COME OFF MACHINE MK 08/06/23 (6)

5.0	QC8	SECOND CHECK

Comment: SECOND CHECK 08.06.23 (6)

6.0	HAAS1	HAAS CNC VERTICAL MACHINING #1

Comment: HAAS CNC VERTICAL MACHINING #1
Deburr-~~and Tumble~~
08.06.23

Form: rprocess

Process Sheet

Customer: CU-DAR001 Dart Helicopters Services

Drawing Name: LITTER TIE DOWN ASS'Y (LOCKING) - UNDER REVIEW

Job Number: 39455

Part Number: D2360

Job Number:

Seq. #:	Machine Or Operation:	Description :
7.0	QC5	INSPECT WORK TO CURRENT STEP
	Comment: INSPECT WORK TO CURRENT STEP	u/a 08/06/23
8.0	HAND FINISHING1	HAND FINISHING RESOURCE #1
	Comment: HAND FINISHING RESOURCE #1 Chemical Conversion Coat as per QSI 005 4.1	OK M. 08/06/24
9.0	POWDER COATING	POWDER COATING
	Comment: POWDER COATING Powder Coat White Gloss (Ref: 4.3.5.1) as per QSI 005 4.3 M 107425 START TIME: 11:45 OVEN TEMPERATURE: 326 FINISH TIME: 12:15	BK 08-06-26 (6)
10.0	QC3	INSPECT POWDER COAT/CHEMICAL CONVERSION
	Comment: INSPECT POWDER COAT/CHEMICAL CONVERSION	EB 08/06/26
11.0	D2002015	Knob
	Comment: Qty.: 2.0000 Each(s)/Unit Total : 12.0000 Each(s) Knob B16177B	EB 08/06/26
12.0	D2345	Lock Channel
	Comment: Qty.: 1.0000 Each(s)/Unit Total : 6.0000 Each(s) Lock Channel B36577 (5X) B39474 (1X)	EB 08/06/26
13.0	D2366	Lock Handle
	Comment: Qty.: 2.0000 Each(s)/Unit Total : 12.0000 Each(s) Inventory B37431	EB 08/06/26
14.0	D2367	Handle Knob
	Comment: Qty.: 1.0000 Each(s)/Unit Total : 6.0000 Each(s) Inventory B33794	EB 08/06/26

Form: rprocess

Process Sheet

Customer: CU-DAR001 Dart Helicopters Services **Drawing Name:** LITTER TIE DOWN ASS'Y (LOCKING) - UNDER REVIEW

Job Number: 39455 **Part Number:** D2360

Job Number:

Seq. #:	Machine Or Operation:	Description :
15.0	D2372	Quick Release
	Comment: Qty.: 2.0000 Each(s)/Unit Total : 12.0000 Each(s) Quick Release B39456	EB08/06/26
16.0	D2373	Spring
	Comment: Qty.: 1.0000 Each(s)/Unit Total : 6.0000 Each(s) Spring B36922	EB08/06/26
17.0	D2444	Pip Pin Assembly
	Comment: Qty.: 1.0000 Each(s)/Unit Total : 6.0000 Each(s) Pip Pin Assembly B38895	EB08/06/26
18.0	AN526C1032R18	Screw
	Comment: Qty.: 1.0000 Each(s)/Unit Total : 6.0000 Each(s) M4523 Screw ~~M10600~~ ~~M3071~~	EB08/06/26
19.0	AN960JD10	Washer
	Comment: Qty.: 2.0000 Each(s)/Unit Total : 12.0000 Each(s) Washer M108077	EB08/06/26
20.0	AN960JD10L	Washer
	Comment: Qty.: 8.0000 Each(s)/Unit Total : 48.0000 Each(s) Washer M104885	EB08/06/26
21.0	MS20470AD34	Rivet,Universal Head
	Comment: Qty.: 1.0000 Each(s)/Unit Total : 6.0000 Each(s) Rivet,Universal Head M15541	EB08/06/26
22.0	MS21042L3	Nut
	Comment: Qty.: 3.0000 Each(s)/Unit Total : 18.0000 Each(s) Nut M107665	EB08/06/26

Process Sheet

Customer: CU-DAR001 Dart Helicopters Services

Drawing Name: LITTER TIE DOWN ASS'Y (LOCKING) - UNDER REVIEW

Job Number: 39455

Part Number: D2360

Job Number:

Seq. #:	Machine Or Operation:	Description :
23.0	MS27039113	Screw
	Comment: Qty.: 1.0000 Each(s)/Unit Total : 6.0000 Each(s) Screw M105211	EB 08/06/26
24.0	MS27039115	Screw
	Comment: Qty.: 2.0000 Each(s)/Unit Total : 12.0000 Each(s) Screw M106903	EB 08/06/26
25.0	NAS679A3W	Nut
	Comment: Qty.: 1.0000 Each(s)/Unit Total : 6.0000 Each(s) Nut M1463	EB 08/06/26
26.0	SMALL FAB 1	SMALL & MEDIUM FAB RESOURCE 1
	Comment: SMALL & MEDIUM FAB RESOURCE 1 Assemble as per dwg D2360	EB 08/06/26
27.0	QC5	INSPECT WORK TO CURRENT STEP
	Comment: INSPECT WORK TO CURRENT STEP	S 08/06/26
28.0	PACKAGING 1	PACKAGING RESOURCE #1
	Comment: PACKAGING RESOURCE #1 Identify and Stock Location:_____	8/6/26 Sp
29.0	QC21	FINAL INSPECTION/W/O RELEASE
	Comment: FINAL INSPECTION/W/O RELEASE	08/06/26

Job Completion

MF 08-06-26

DART AEROSPACE LTD	Work Order:	39455
Description: Litter Tie Down Bracket (Locking)	Part Number:	D2341
Inspection Dwg: D2341 Rev: F		Page 1 of 1

FIRST ARTICLE INSPECTION CHECKLIST

[X] First Article [ ] Prototype

Drawing Dimension	Tolerance	Actual Dimension	Accept	Reject	Method of Inspection	Comments
1.500	+/-0.010	1.501	✓			
1.000	+/-0.010	1.000	✓			
Ø0.242	+0.005/-0.001	Ø.243	✓			
Ø0.191	+0.005/-0.001	Ø.193	✓			
R0.250	+/-0.010	R.250	✓			
1.700	+/-0.010					
0.750	+/-0.010	.753	✓			
2.750	+/-0.010	2.755	✓			
11.000	+/-0.005	10.997	✓			
5.500	+/-0.010	5.496	✓			
1.584	+/-0.010	1.589	✓			
Ø0.191	+0.005/-0.001	Ø.193	✓			
2.610	+/-0.010	2.615	✓			
0.844	+/-0.010	.844	✓			
1.250	+/-0.010	1.254	✓			
0.750	+/-0.010	.754	✓			
12.500	+/-0.010	12.502	✓			
3.313	+/-0.010	3.316	✓			
4.250	+/-0.010	4.249	✓			
0.400	+/-0.010	.400	✓			

Measured by:	JML	Audited by:	DH	Prototype Approval:	N/A
Date:	08/06/22	Date:	08/06/22	Date:	N/A

Rev	Date	Change	Revised by	Approved
A	06.05.24	New Issue P/O D2360	KJ/JLM	
B	07.07.17	Dwg Rev. updated	KJ/JLM KJ	EE

DESIGN	DRAWN BY	DART AEROSPACE LTD HAWKESBURY, ONTARIO, CANADA
BW	CB	
CHECKED: CE	APPROVED:	DRAWING NO. D2360 — REV. D — SHEET 1 OF 2
DATE: 07.06.06		TITLE: LITTER TIE DOWN ASSEMBLY (LOCKING) — SCALE: NTS

A	95.02.10	NEW ISSUE
B	95.02.20	RE–DESIGN
C	97.08.27	ADD MS20470AD3–4 RIVET
D	07.06.06	D2002–015 WAS D2376; SECTION B–B QTY(2) AN960JD10 WAS QTY(3) QTY(8) AN960JD10L WAS QTY(5)

RELEASED
97.06.07

PARTS LIST:

	QTY	PART NUMBER	DESCRIPTION
	X	D2360	LITTER TIE DOWN ASSEMBLY (LOCKING)
	1	D2341	LITTER TIE DOWN (LOCKING)
	1	D2345	LOCK CHANNEL
	2	D2366	LOCK HANDLE
	1	D2367	KNOB (DELRIN)
	2	D2372	QUICK RELEASE FASTENERS
	1	D2373	SPRING
D	2	D2002-015	KNOB (DELRIN)
	1	D2444	PIP PIN
	1	AN526C1032R18	SCREW
D	2	AN960JD10	WASHER
D	8	AN960JD10L	WASHER
	1	MS20470AD3-4	RIVET
	3	MS21042L3	NUT (OR MS21042-3)
	1	MS27039-1-13	SCREW
	2	MS27039-1-15	SCREW
	1	NAS679A3W	NUT

SHOP COPY
RETURN TO
ENGINEERING
UNCONTROLLED COPY
SUBJECT TO AMENDMENT
WITHOUT NOTICE
WORK ORDER
NO.

DESIGN	DRAWN BY	DART AEROSPACE LTD HAWKESBURY, ONTARIO, CANADA	
BW	SC		
CHECKED	APPROVED	DRAWING NO. D2341	REV. F SHEET 1 OF 1
DATE 07.06.07		TITLE LITTER TIE DOWN BRACKET (LOCKING)	SCALE 1:2

A	95.01.13	NEW ISSUE
B	95.02.14	MODIFIED LOCK
D	95.02.20	CHANGES TO DIAMETERS
E	97.10.01	CHANGES FOR MACHINING
F	07.06.07	REVISED NOTES; FINISH WAS ANODIZE

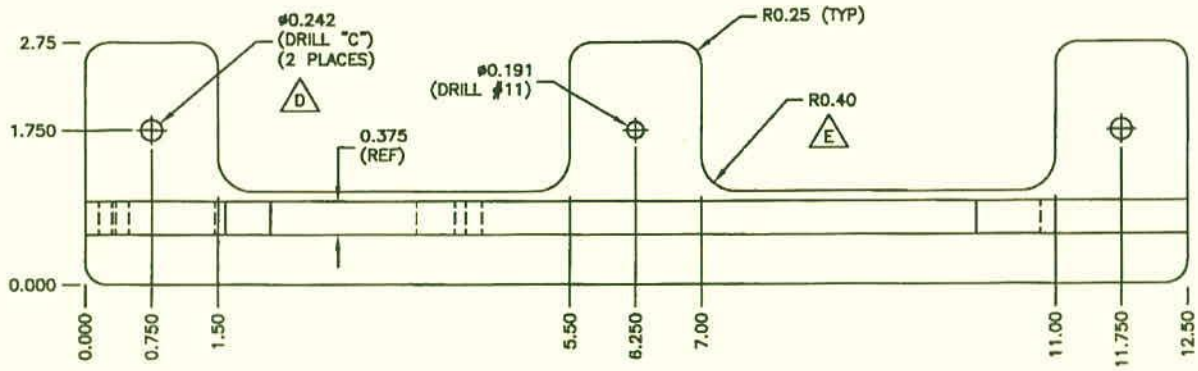

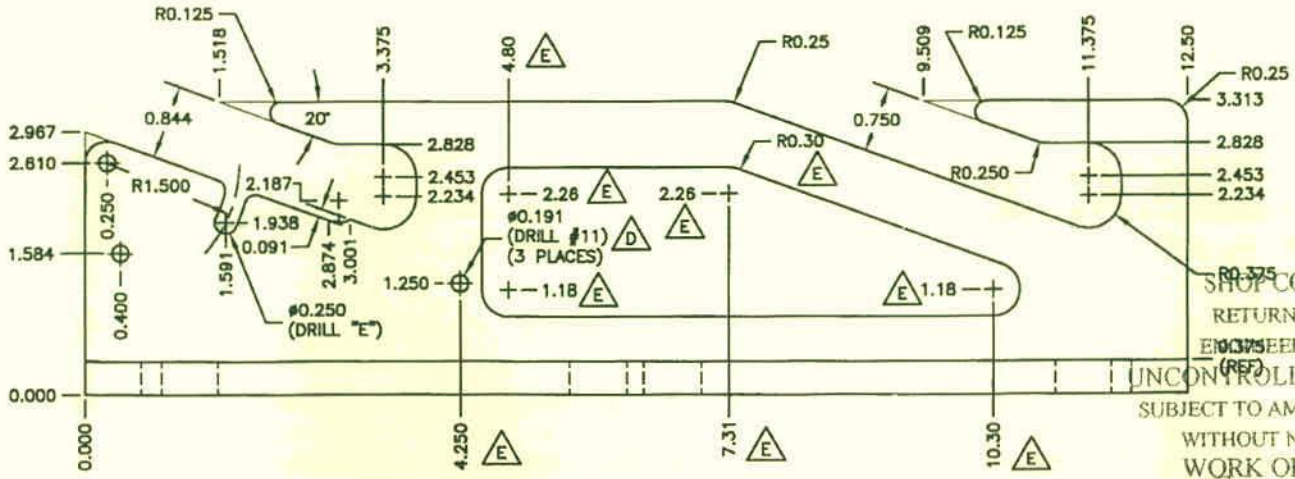

D2341 LITTER TIE DOWN BRACKET (LOCKING)

1) MATERIAL: MAKE FROM D6201-0125 EXTRUSION (6061-T6/T651 PER QQ-A-200/8)
2) FINISH: CHEMICAL CONVERSION COAT PER DART QSI 005 4.1 POWDER COAT WHITE (REF. 4.3.5.1) PER QSI 005 4.3 (F)
3) BREAK ALL SHARP EDGES TO 0.005 TO 0.010
4) TOLERANCES ARE PER DART QSI 018 UNLESS OTHERWISE NOTED
5) ALL DIMENSIONS ARE IN INCHES UNLESS OTHERWISE NOTED
6) IDENTIFY WITH DART P/N "D2341" USING FINE POINT PERMANENT INK MARKER

RELEASED
07.06.22

DESIGN	DRAWN BY	DART AEROSPACE LTD HAWKESBURY, ONTARIO, CANADA
BW	CB	
CHECKED	APPROVED	DRAWING NO. REV. I
CE		D2360 SHEET 2 OF :
DATE		TITLE SCALE
07.06.06		LITTER TIE DOWN ASSEMBLY (LOCKING) NTS

RELEASED
07 06 07

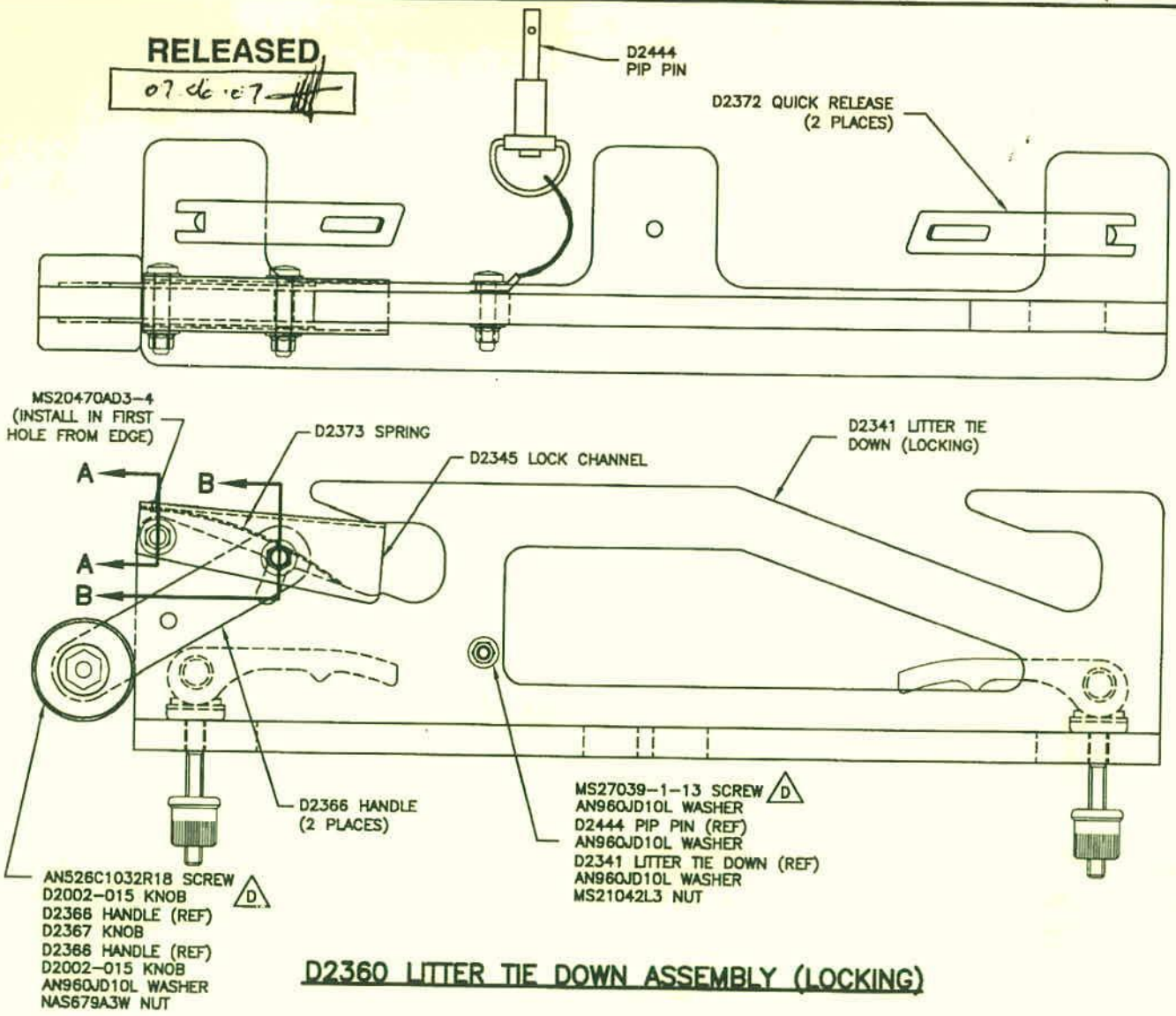

D2360 LITTER TIE DOWN ASSEMBLY (LOCKING)

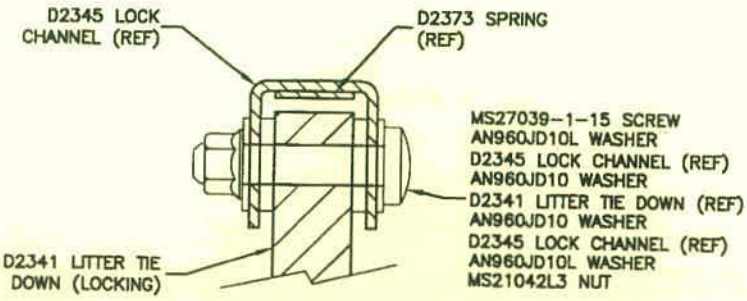

SECTION A-A
(SCALE 1:1)

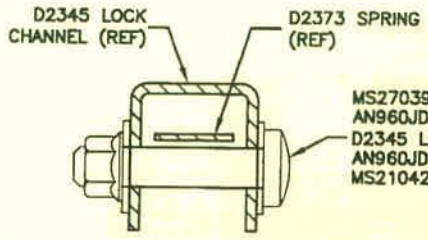

SECTION B-B D
(SCALE 1:1)